REVISION				
REV.	ZONE	DESCRIPTION	DATE	DRAWNBY
A		INITIAL RELEASE	7/17/2025	L. BADONG

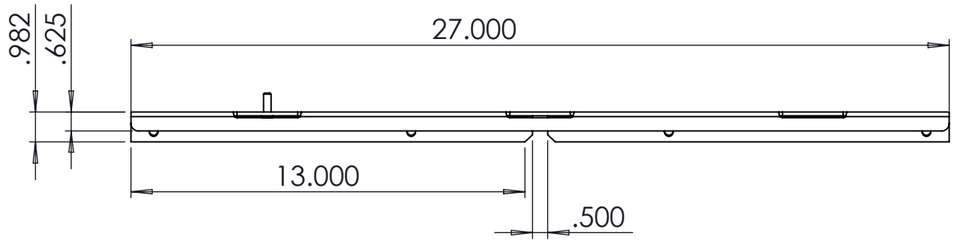

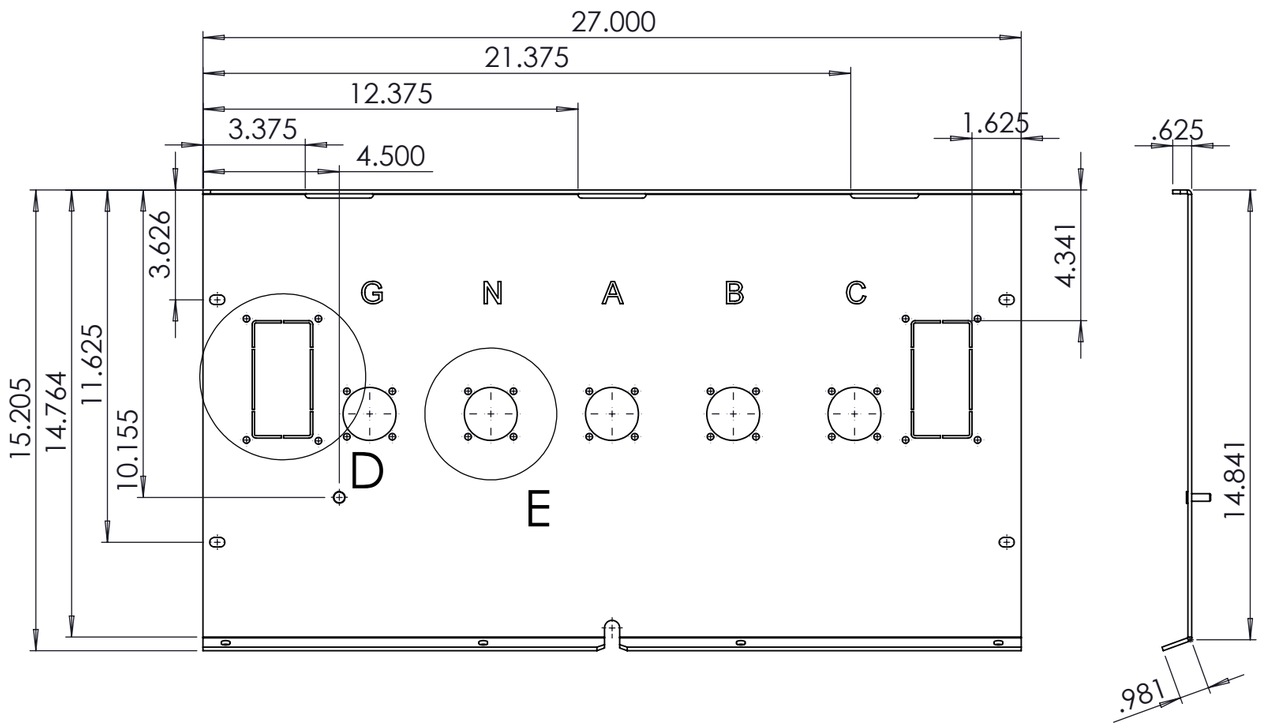

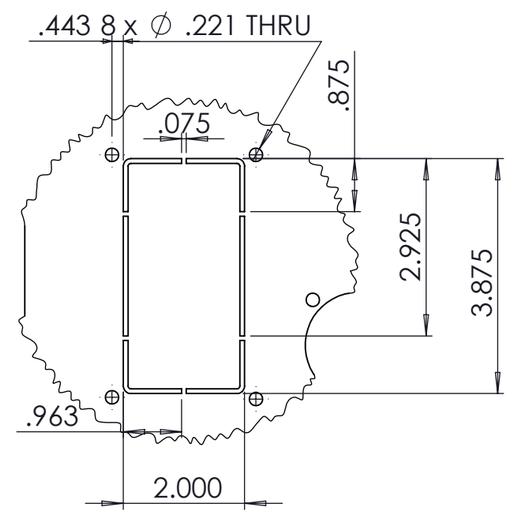

DETAIL D

SCALE 2 : 5

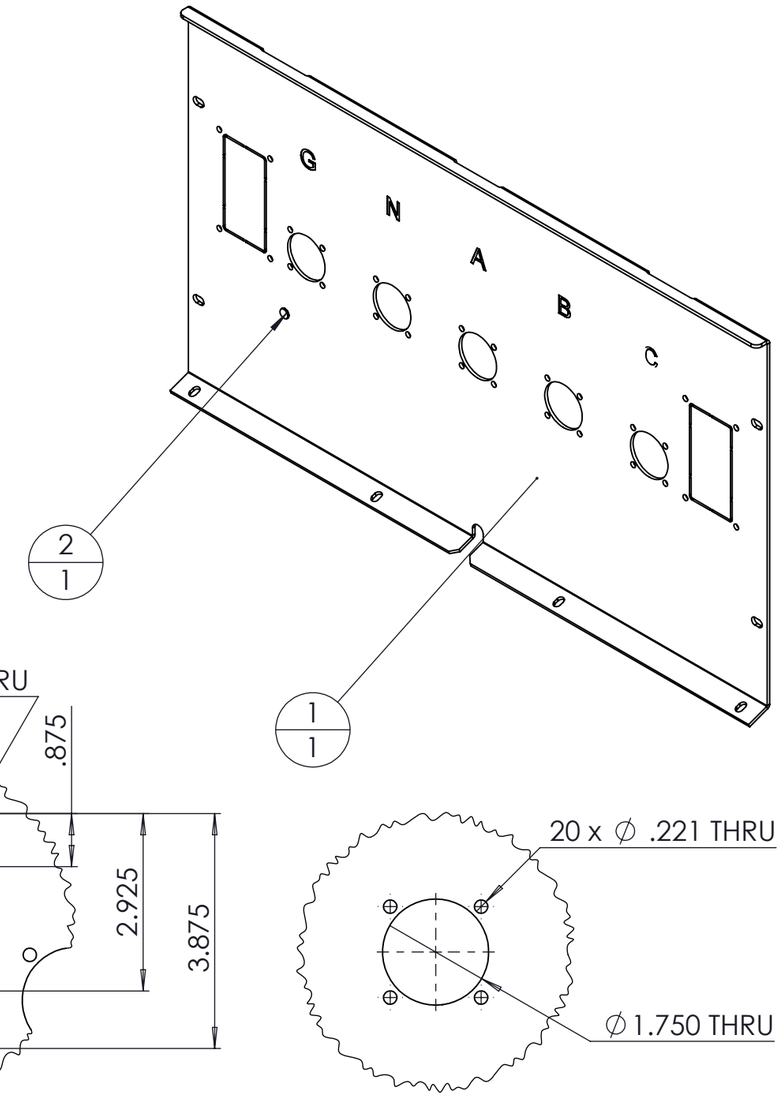

DETAIL E

SCALE 2 : 5

BILL OF MATERIAL

ITEM NO.	PART NUMBER	DESCRIPTION	QTY.
1	200-90001	PLATE, CAMLOCK, 400A, 423016	1
2	PEM HFHS-0420-12		1

MATERIAL 5.075 lbs

FINISH BARE

PROPRIETARY AND CONFIDENTIAL

THE INFORMATION CONTAINED IN THIS DRAWING IS THE SOLE PROPERTY OF FOXFAB POWER SOLUTIONS ANY REPRODUCTION IN PART OR AS A WHOLE WITHOUT THE WRITTEN PERMISSION OF FOXFAB POWER SOLUTIONS IS PROHIBITED.

DRAWN BY | SAVED ON 7/18/2025

BD - | TOP DIE 1mm | BOTTOM DIE 16mm

UNLESS OTHERWISE SPECIFIED:
DIMENSIONS ARE IN INCHES
TOLERANCES:
X ± .25
X.X ± .1
X.XX ± .05
X.XXX ± .025
ANGULAR ± 1
INTERPRET DIM AND TOL. PER:
ASME Y14.5

Foxfab Power Solutions
2579-188 ST.
SURREY, BC V3Z 2A1
(604) 460 - 9310
WWW.FOXFAB.COM

TITLE: PLATE, CAMPLATE, 400A C1

THIRD ANGLE | SIZE B | SCALE 1:5 | REV A

ITEM NO. | DWG. NO. 200-90001 | SHEET 1 OF 3

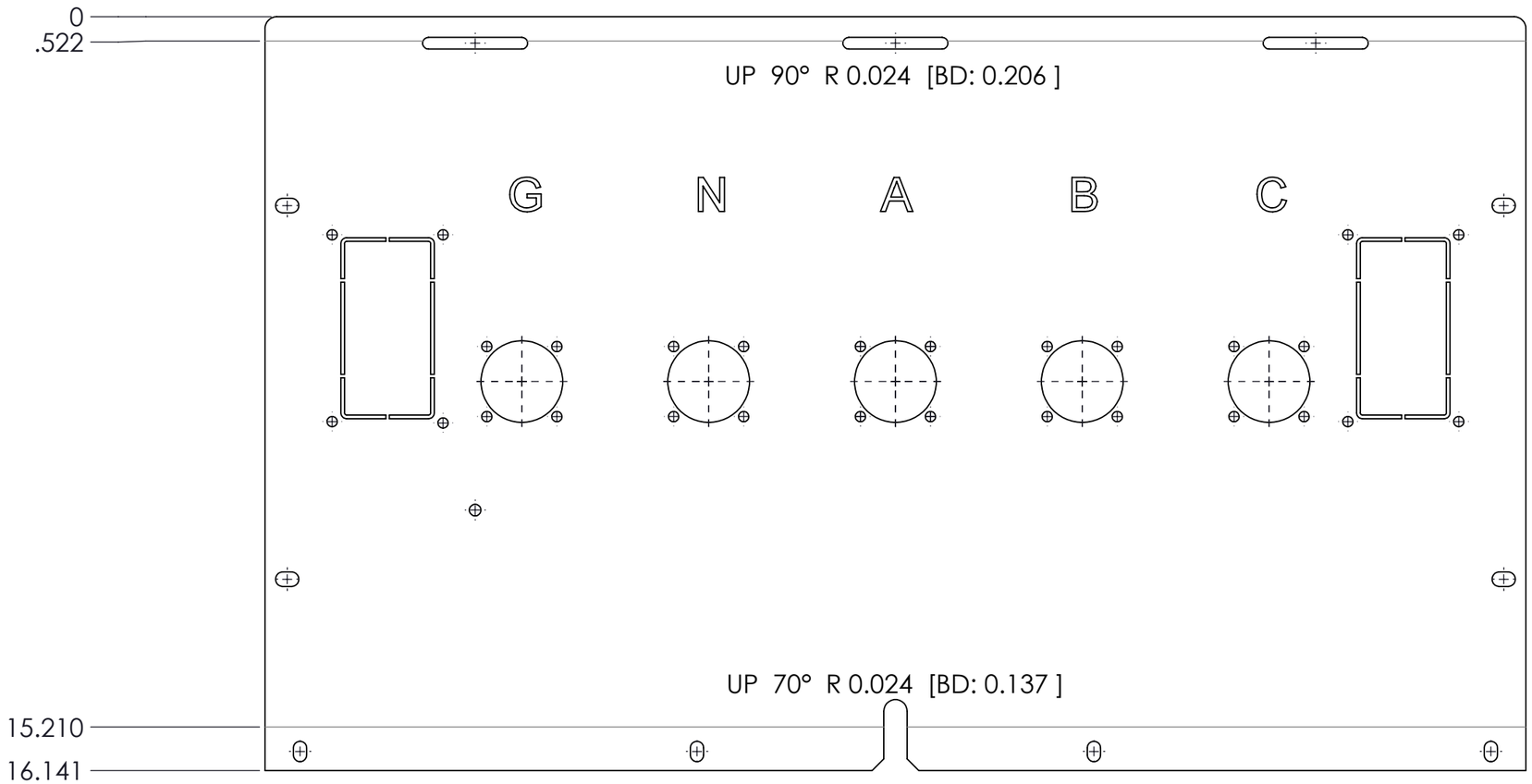

ANGLE	BD
90	0.206"
70	0.137"

MATERIAL 5.075 lbs

FINISH
BARE

PROPRIETARY AND CONFIDENTIAL

THE INFORMATION CONTAINED IN THIS DRAWING IS THE SOLE PROPERTY OF FOXFAB POWER SOLUTIONS ANY REPRODUCTION IN PART OR AS A WHOLE WITHOUT THE WRITTEN PERMISSION OF FOXFAB POWER SOLUTIONS IS PROHIBITED.

DRAWN BY
SAVED ON 7/18/2025

BD	TOP DIE	BOTTOM DIE
-	1mm	16mm

UNLESS OTHERWISE SPECIFIED:
DIMENSIONS ARE IN INCHES
TOLERANCES:
X ± .25
X.X ± .1
X.XX ± .05
X.XXX ± .025
ANGULAR ± 1
INTERPRET DIM AND TOL. PER:
ASME Y14.5

Foxfab
Power Solutions
2579-188 ST.
SURREY, BC V3Z 2A1
(604) 460 - 9310
WWW.FOXFAB.COM

TITLE:
PLATE, CAMPLATE, 400A C1

THIRD ANGLE: SIZE **B** SCALE 1:5 REV A

ITEM NO. DWG. NO. 200-90001 SHEET 2 OF 3

TAG	X LOC	Y LOC	SIZE
A1	0.48	4.10	.313 X .500 THRU
A2	26.53	4.10	.313 X .500 THRU
A3	26.53	12.10	.313 X .500 THRU
B1	0.75	0.41	.281 X .438 THRU
B2	9.25	0.41	.281 X .438 THRU
B3	17.75	0.41	.281 X .438 THRU
B4	26.25	0.41	.281 X .438 THRU
C1	1.44	7.47	∅ .221 THRU
C2	1.44	11.47	∅ .221 THRU
C3	3.81	7.44	∅ .221 THRU
C4	3.81	11.47	∅ .221 THRU
C5	4.75	7.58	∅ .221 THRU
C6	4.75	9.08	∅ .221 THRU
C7	6.25	7.58	∅ .221 THRU
C8	6.25	9.08	∅ .221 THRU
C9	8.75	7.58	∅ .221 THRU
C10	8.75	9.08	∅ .221 THRU
C11	10.25	7.58	∅ .221 THRU
C12	10.25	9.08	∅ .221 THRU
C13	12.75	7.58	∅ .221 THRU
C14	12.75	9.08	∅ .221 THRU
C15	14.25	7.58	∅ .221 THRU
C16	14.25	9.08	∅ .221 THRU
C17	16.75	7.58	∅ .221 THRU
C18	16.75	9.08	∅ .221 THRU
C19	18.25	7.58	∅ .221 THRU
C20	18.25	9.08	∅ .221 THRU
C21	20.75	7.58	∅ .221 THRU
C22	20.75	9.08	∅ .221 THRU
C23	22.25	7.58	∅ .221 THRU
C24	22.25	9.08	∅ .221 THRU
C25	23.19	7.47	∅ .221 THRU
C26	23.19	11.47	∅ .221 THRU
C27	25.56	7.47	∅ .221 THRU
C28	25.56	11.47	∅ .221 THRU
D1	4.50	5.58	∅ .250 THRU
E1	4.50	15.57	∅ .250
E2	13.50	15.57	∅ .250
E3	22.50	15.57	∅ .250
F1	5.50	8.33	∅ 1.750 THRU
F2	9.50	8.33	∅ 1.750 THRU
F3	13.50	8.33	∅ 1.750 THRU
F4	17.50	8.33	∅ 1.750 THRU
F5	21.50	8.33	∅ 1.750 THRU

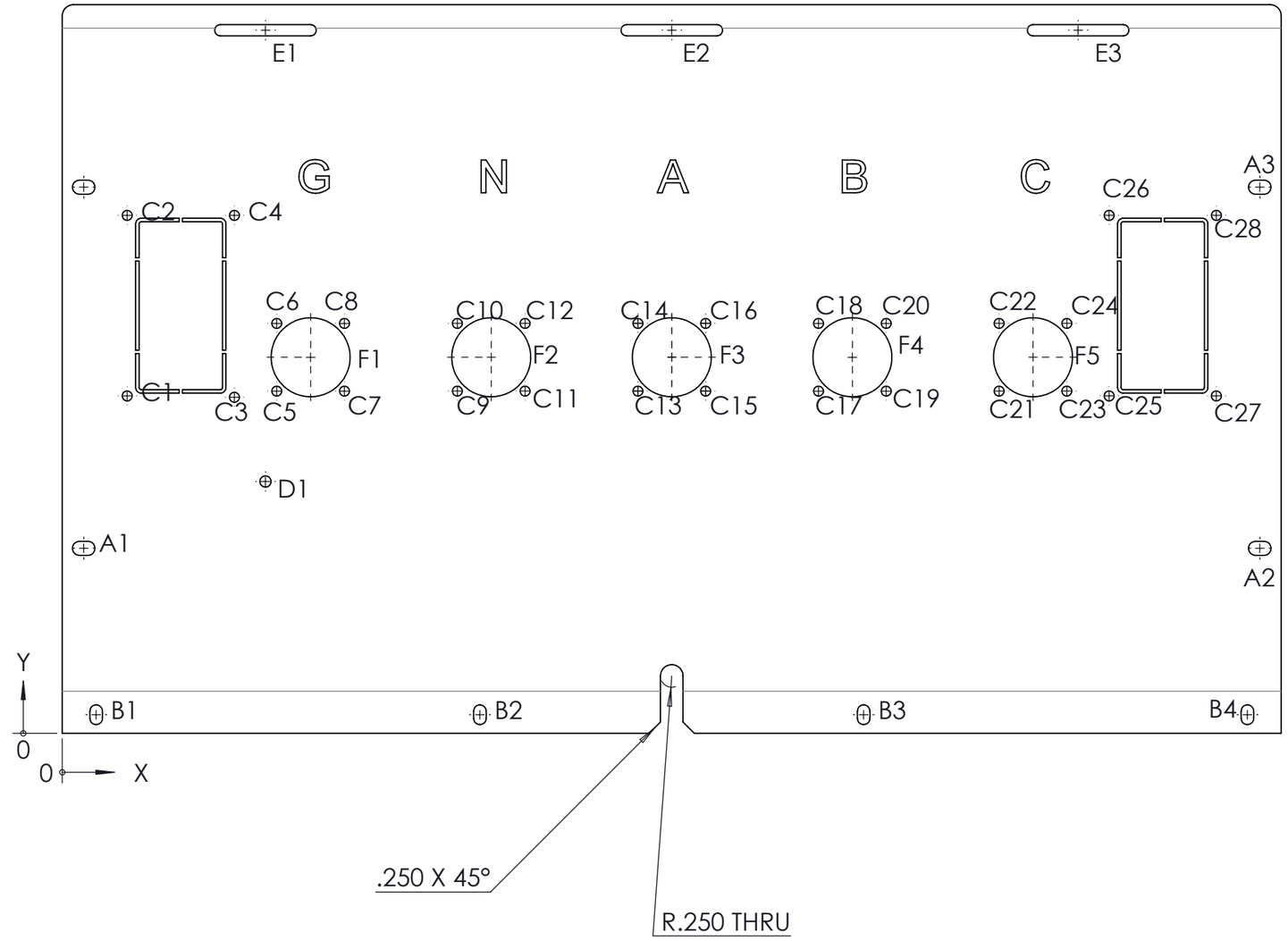

MATERIAL 5.075 lbs

FINISH
BARE

PROPRIETARY AND CONFIDENTIAL

THE INFORMATION CONTAINED IN THIS DRAWING IS THE SOLE PROPERTY OF FOXFAB POWER SOLUTIONS. ANY REPRODUCTION IN PART OR AS A WHOLE WITHOUT THE WRITTEN PERMISSION OF FOXFAB POWER SOLUTIONS IS PROHIBITED.

DRAWN BY

SAVED ON 7/18/2025

BD	TOP DIE	BOTTOM DIE
-	1mm	16mm

UNLESS OTHERWISE SPECIFIED:
DIMENSIONS ARE IN INCHES
TOLERANCES:
X ± .25
X.X ± .1
X.XX ± .05
X.XXX ± .025
ANGULAR ± 1
INTERPRET DIM AND TOL. PER:
ASME Y14.5

Foxfab Power Solutions
2579-188 ST.
SURREY, BC V3Z 2A1
(604) 460 - 9310
WWW.FOXFAB.COM

TITLE:
PLATE, CAMPLATE, 400A C1

THIRD ANGLE: SIZE **B** SCALE 1:5 REV A

ITEM NO. DWG. NO. 200-90001 SHEET 3 OF 3

REVISION				
REV.	ZONE	DESCRIPTION	DATE	DRAWNBY
A		INITIAL RELEASE	7/16/2025	L. BADONG

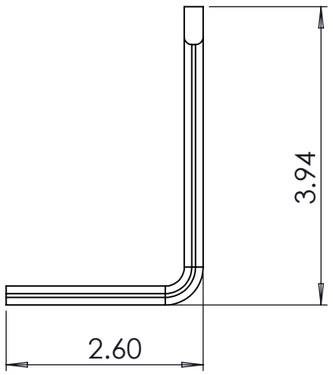

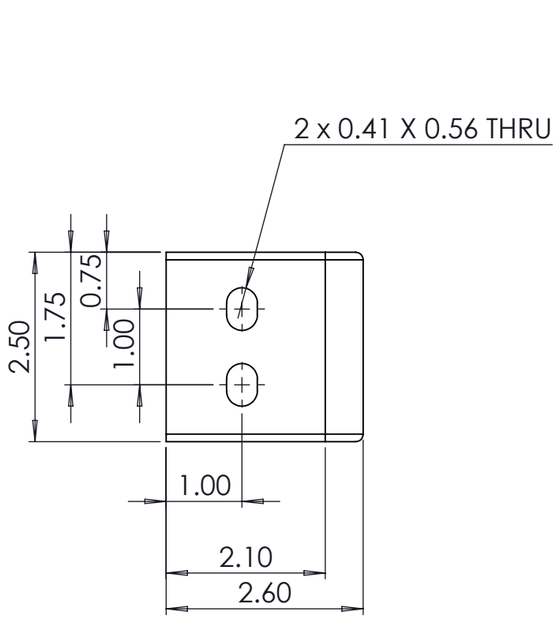

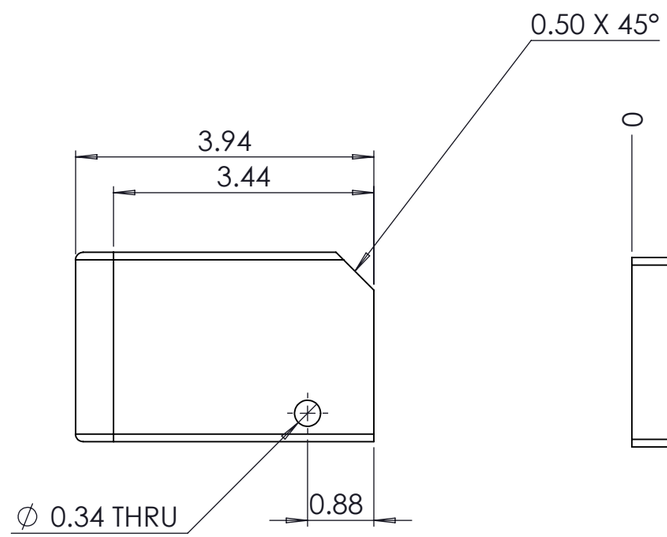

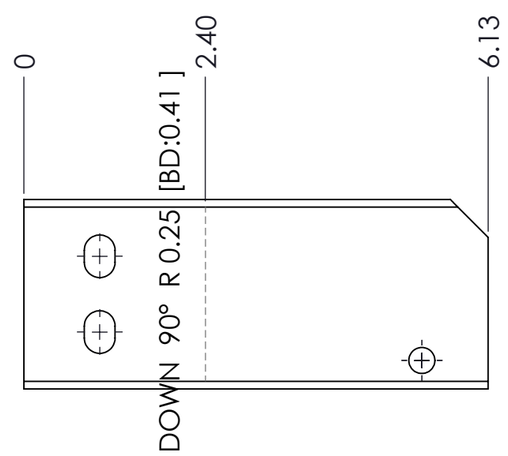

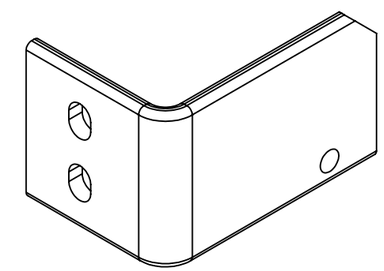

MATERIAL 1.17 lbs 0.25 C1100 CU BAR	DRAWN BY LB	SAVED ON 7/18/2025	Foxfab Power Solutions 2579-188 ST. SURREY, BC V3Z 2A1 (604) 460 - 9310 WWW.FOXFAB.COM
FINISH BARE	BD 0.410" / TOP DIE 0.25"	BOTTOM DIE 1.26"	TITLE: BUS, CAMLOCK CONNECTOR, 400A
PROPRIETARY AND CONFIDENTIAL THE INFORMATION CONTAINED IN THIS DRAWING IS THE SOLE PROPERTY OF FOXFAB POWER SOLUTIONS ANY REPRODUCTION IN PART OR AS A WHOLE WITHOUT THE WRITTEN PERMISSION OF FOXFAB POWER SOLUTIONS IS PROHIBITED.	UNLESS OTHERWISE SPECIFIED: DIMENSIONS ARE IN INCHES TOLERANCES: X ± 0.25" X.X ± .1 X.XX ± .05 X.XXX ± .025 ANGULAR ± 1 INTERPRET DIM AND TOL. PER: **ASME Y14.5**	THIRD ANGLE: SIZE **B**	SCALE 1:2 / REV A
		ITEM NO. / DWG. NO. 240-90004	SHEET 1 OF 1

REVISION				
REV.	ZONE	DESCRIPTION	DATE	DRAWNBY
A		INITIAL RELEASE	7/16/2025	L. BADONG

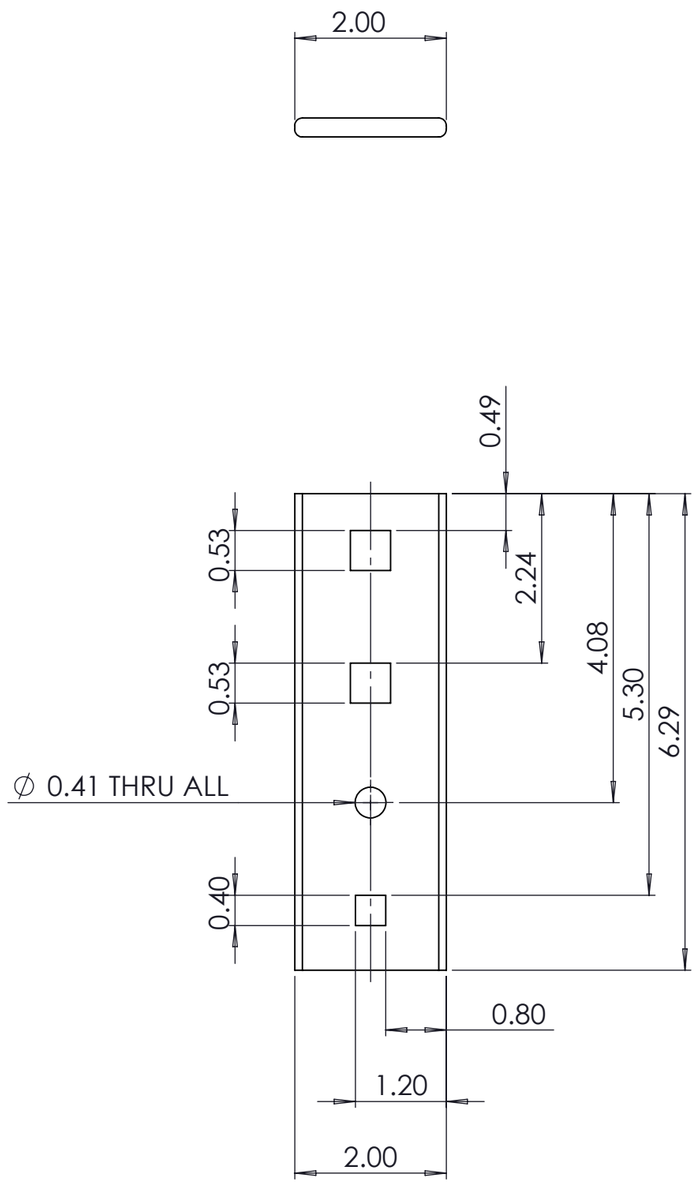

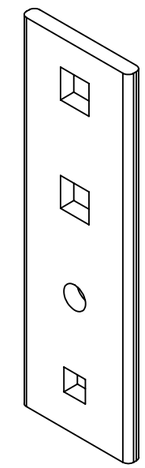

MATERIAL 0.93 lbs 0.25 Copper	DRAWN BY LB	SAVED ON 7/18/2025	Foxfab Power Solutions 2579-188 ST. SURREY, BC V3Z 2A1 (604) 460 - 9310 WWW.FOXFAB.COM
FINISH BARE	BD - / TOP DIE - / BOTTOM DIE -		TITLE: BUS, 400A, FUSE
PROPRIETARY AND CONFIDENTIAL THE INFORMATION CONTAINED IN THIS DRAWING IS THE SOLE PROPERTY OF FOXFAB POWER SOLUTIONS. ANY REPRODUCTION IN PART OR AS A WHOLE WITHOUT THE WRITTEN PERMISSION OF FOXFAB POWER SOLUTIONS IS PROHIBITED.	UNLESS OTHERWISE SPECIFIED: DIMENSIONS ARE IN INCHES TOLERANCES: X ± .25 X.X ± .1 X.XX ± .05 X.XXX ± .025 ANGULAR ±1 INTERPRET DIM AND TOL. PER: **ASME Y14.5**		THIRD ANGLE: SIZE **B** SCALE 1:2 REV A ITEM NO. DWG. NO. 240-90005 SHEET 1 OF 1

REVISION				
REV.	ZONE	DESCRIPTION	DATE	DRAWNBY
A		INITIAL RELEASE	7/16/2025	L. BADONG

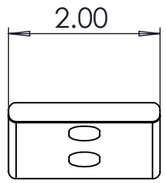

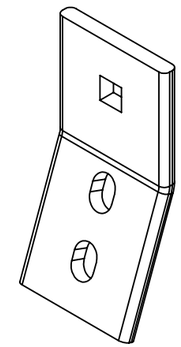

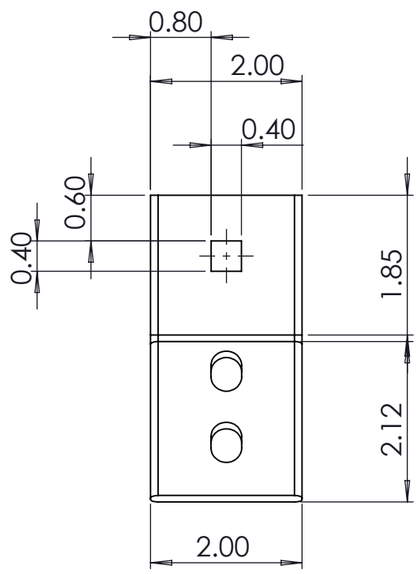

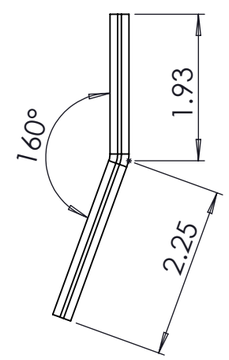

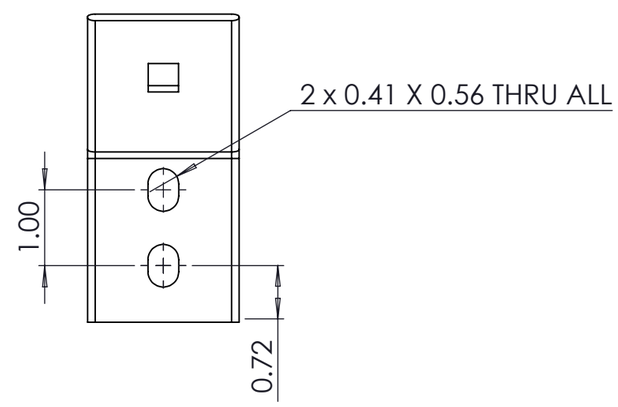

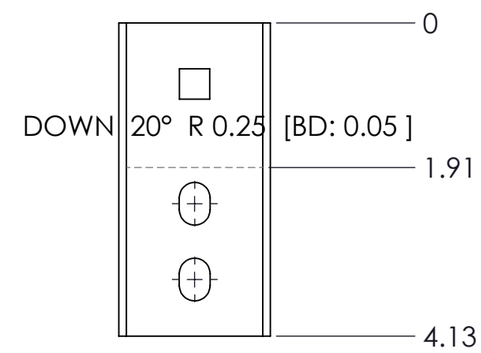

MATERIAL	0.61 lbs
0.25 Copper	
FINISH	
BARE	

PROPRIETARY AND CONFIDENTIAL

THE INFORMATION CONTAINED IN THIS DRAWING IS THE SOLE PROPERTY OF FOXFAB POWER SOLUTIONS ANY REPRODUCTION IN PART OR AS A WHOLE WITHOUT THE WRITTEN PERMISSION OF FOXFAB POWER SOLUTIONS IS PROHIBITED.

DRAWN BY	SAVED ON
LB	7/18/2025

BD	TOP DIE	BOTTOM DIE
0.0452"	0.25"	1.26"

UNLESS OTHERWISE SPECIFIED:
DIMENSIONS ARE IN INCHES
TOLERANCES:
X ± .25
X.X ± .1
X.XX ± .05
X.XXX ± .025
ANGULAR ± 1
INTERPRET DIM AND TOL. PER:
ASME Y14.5

Foxfab
Power Solutions
2579-188 ST.
SURREY, BC V3Z 2A1
(604) 460 - 9310
WWW.FOXFAB.COM

TITLE:
BUS, ADAPTER, CAMPLATE TO 400A FUSE, MOUNT

THIRD ANGLE: | SIZE **B** | SCALE 1:2 | REV A

ITEM NO. | DWG. NO. 240-90006 | SHEET 1 OF 1

REVISION				
REV.	ZONE	DESCRIPTION	DATE	DRAWNBY
A		INITIAL RELEASE	7/16/2025	L. BADONG

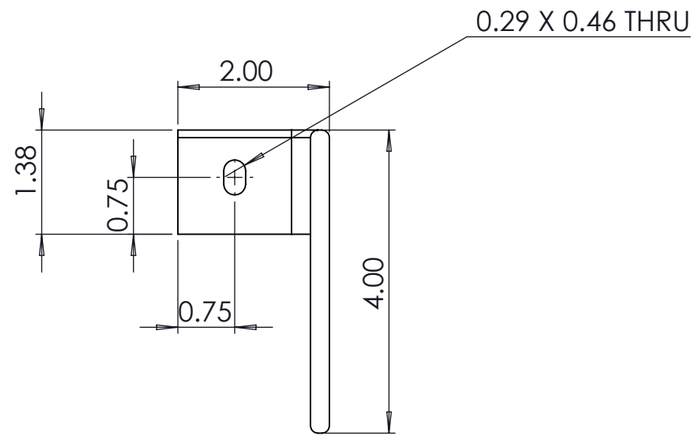

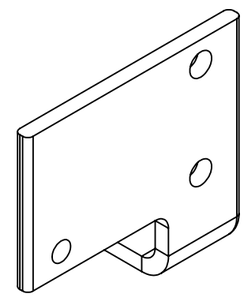

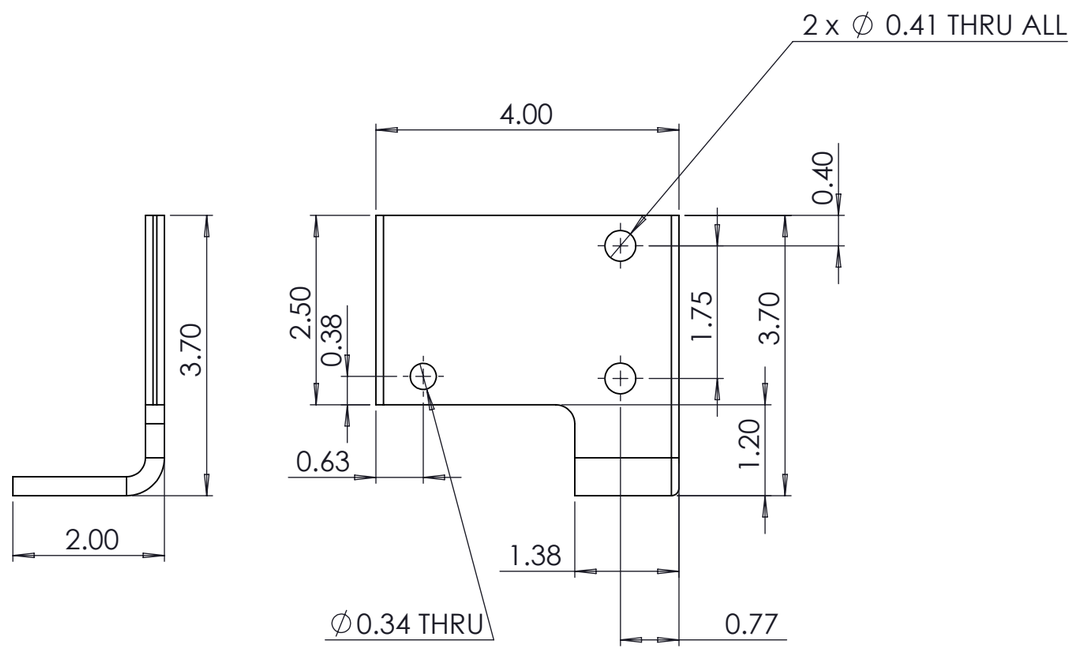

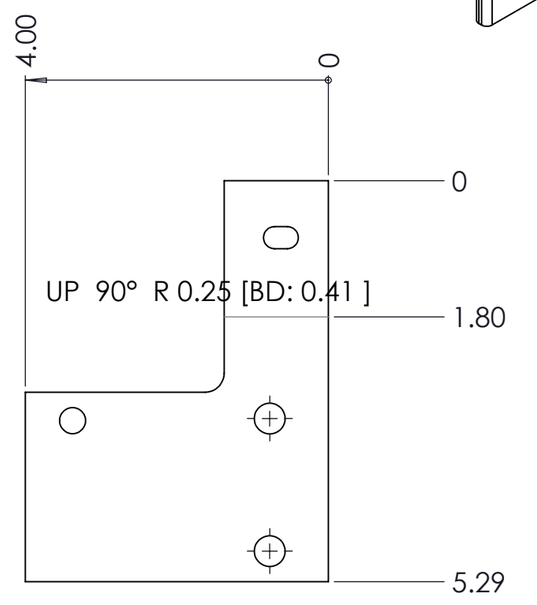

MATERIAL	lbs	DRAWN BY	SAVED ON		
0.25 Copper		LB	7/18/2025		
FINISH		BD	TOP DIE	BOTTOM DIE	
BARE		0.41"	0.25"	1.26"	

PROPRIETARY AND CONFIDENTIAL

THE INFORMATION CONTAINED IN THIS DRAWING IS THE SOLE PROPERTY OF FOXFAB POWER SOLUTIONS ANY REPRODUCTION IN PART OR AS A WHOLE WITHOUT THE WRITTEN PERMISSION OF FOXFAB POWER SOLUTIONS IS PROHIBITED.

UNLESS OTHERWISE SPECIFIED:
DIMENSIONS ARE IN INCHES
TOLERANCES:
X ± .25
X.X ± .1
X.XX ± .05
X.XXX ± .025
ANGULAR ±1
INTERPRET DIM AND TOL. PER:
ASME Y14.5

Foxfab Power Solutions
2579-188 ST.
SURREY, BC V3Z 2A1
(604) 460 - 9310
WWW.FOXFAB.COM

TITLE:
BUS BAR, CAMPLATE, UPTO 1200A, GROUND COMMON

THIRD ANGLE: | SIZE **B** | SCALE 1:2 | REV A

ITEM NO. | DWG. NO. 240-90007 | SHEET 1 OF 1

REVISION				
REV.	ZONE	DESCRIPTION	DATE	DRAWNBY
D	B6	ADDED RELIEF	12/1/2020	BB

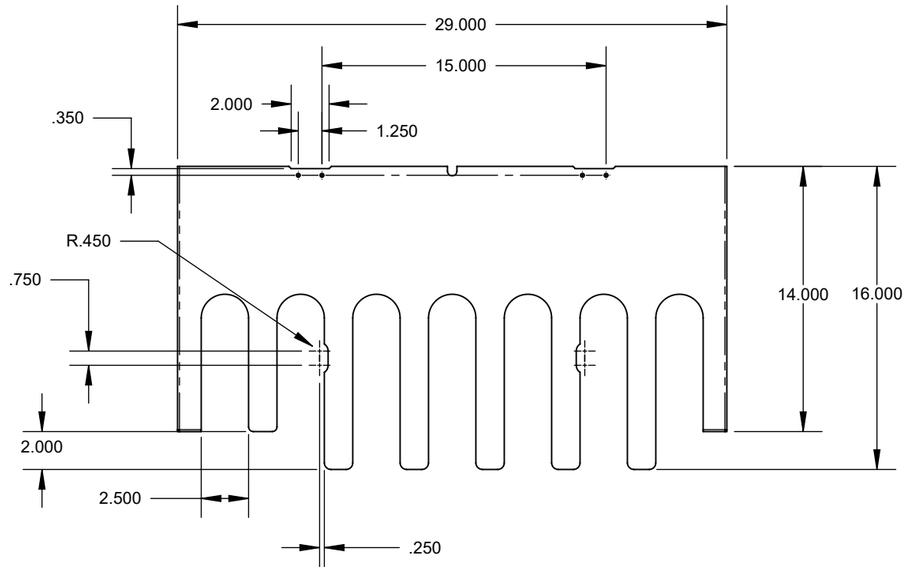

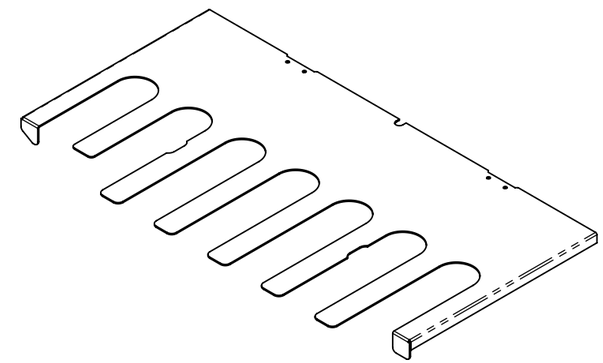

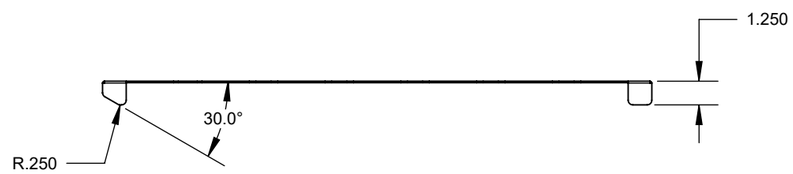

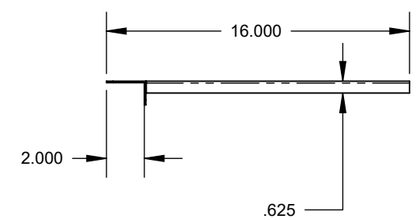

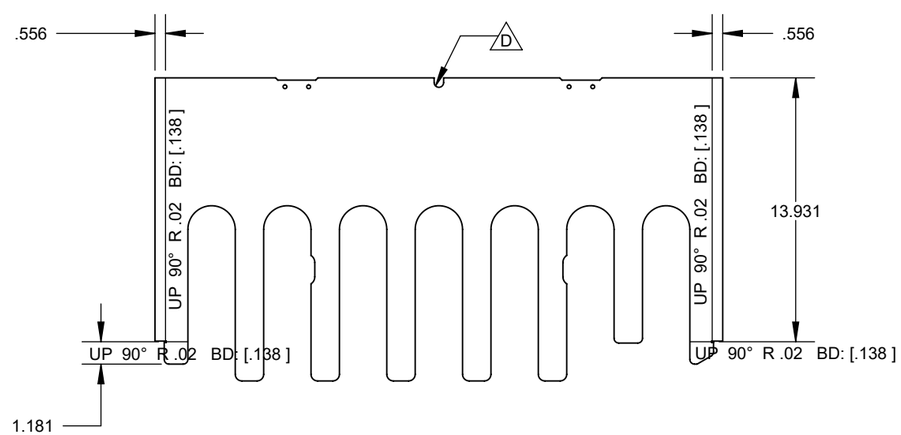

QTY: 1

MATERIAL 7.01 lbs 0.0785 GALVANIZED CRS	DRAWN BY BB	SAVED ON 12/1/2020	Foxfab Power Solutions 2579-188 ST. SURREY, BC V3Z 2A1 (604) 460 - 9310 WWW.FOXFAB.COM
FINISH BARE	BD 0.138" / TOP DIE 1mm / BOTTOM DIE 14mm		TITLE: PANEL, CABLE GUARD
PROPRIETARY AND CONFIDENTIAL THE INFORMATION CONTAINED IN THIS DRAWING IS THE SOLE PROPERTY OF FOXFAB POWER SOLUTIONS ANY REPRODUCTION IN PART OR AS A WHOLE WITHOUT THE WRITTEN PERMISSION OF FOXFAB POWER SOLUTIONS IS PROHIBITED.	UNLESS OTHERWISE SPECIFIED: DIMENSIONS ARE IN INCHES TOLERANCES: X ± .25 X.X ± .1 X.XX ± .05 X.XXX ± .025 ANGULAR ±1 INTERPRET DIM AND TOL. PER: ASME Y14.5		THIRD ANGLE: SIZE B / SCALE 1:8 / REV D
			ITEM NO. / DWG. NO. 250-20057 RevB / SHEET 1 OF 1

REVISION				
REV.	ZONE	DESCRIPTION	DATE	DRAWNBY

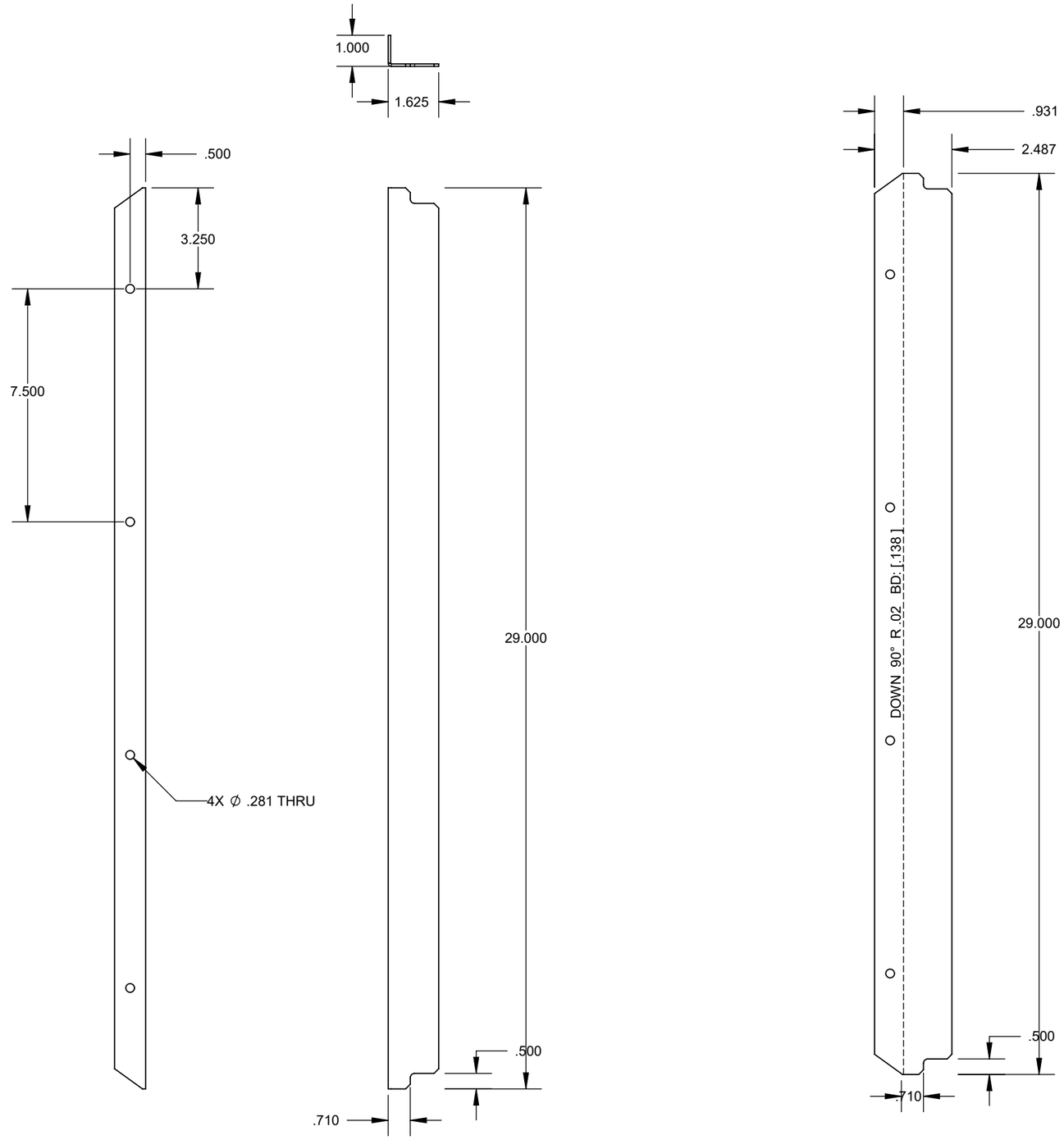

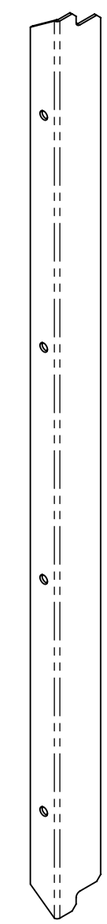

MATERIAL 1.87 lbs 0.0785 GALVANIZED CRS	DRAWN BY ML	CREATED ON 11/9/2017	FOXFAB POWER SOLUTIONS 2579 - 188 ST. SURREY, B.C. V3S 9V2 TEL: 604-460-9310 FAX: 604-460-9317 WWW.FOXFAB.COM
FINISH BARE	BD 0.138" / TOP DIE 1mm	BOTTOM DIE 14mm	TITLE: BRACKET, DEADFRONT, VERTICAL
PROPRIETARY AND CONFIDENTIAL THE INFORMATION CONTAINED IN THIS DRAWING IS THE SOLE PROPERTY OF FOXFAB METAL WORKS ANY REPRODUCTION IN PART OR AS A WHOLE WITHOUT THE WRITTEN PERMISSION OF FOXFAB METAL WORKS IS PROHIBITED.	UNLESS OTHERWISE SPECIFIED: DIMENSIONS ARE IN INCHES TOLERANCES: X ± .25 X.X ± .1 X.XX ± .05 X.XXX ± .025 ANGULAR ±1 INTERPRET DIM AND TOL. PER: **ASME Y14.5**	THIRD ANGLE:	SIZE **B** / SCALE 1:4 / REV A
		ITEM NO. / DWG. NO. 250-20058	SHEET 1 OF 1

REVISION				
REV.	ZONE	DESCRIPTION	DATE	DRAWNBY
A			2/28/2019	F. LAST
B	C4, D7	REDUCED FROM 9.830"; ADDED 0.5" FLANGE FOR STIFFNESS	2/28/2019	BB

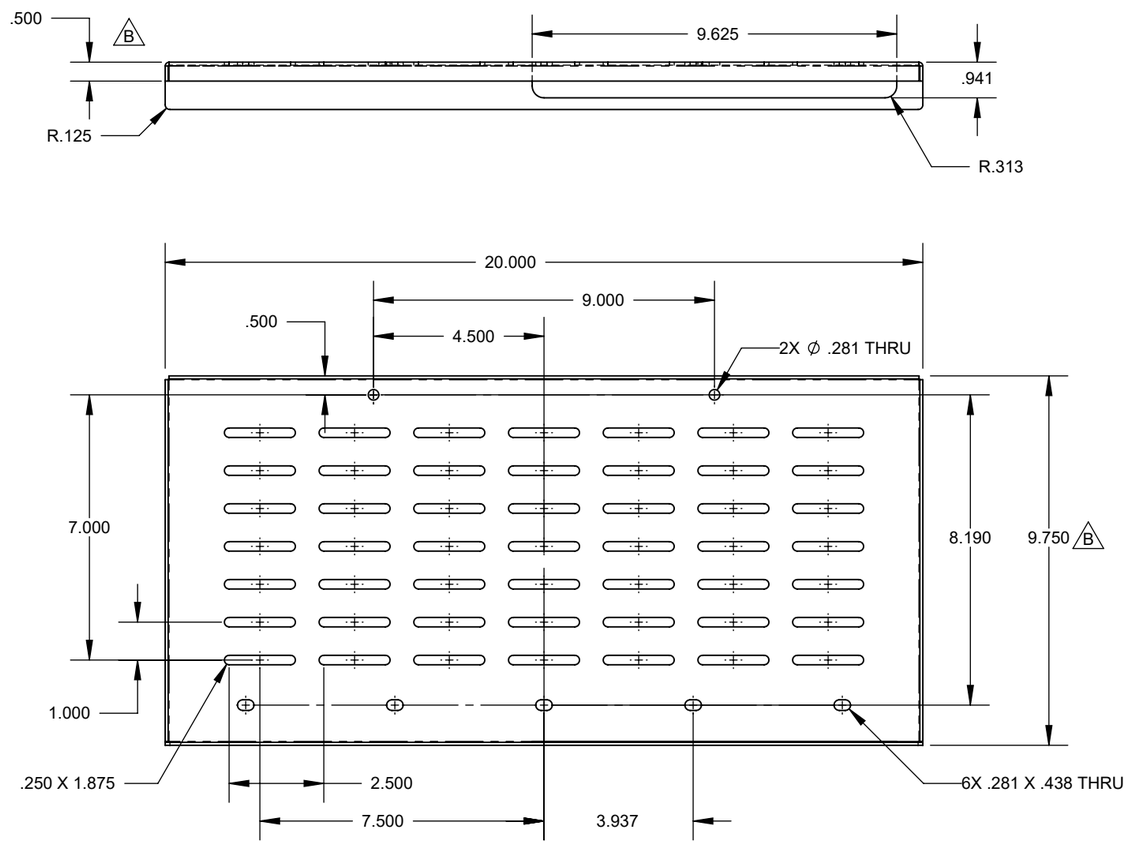

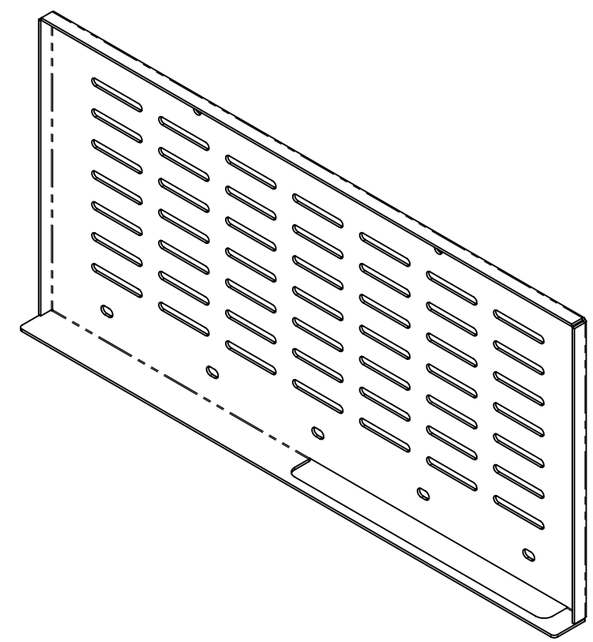

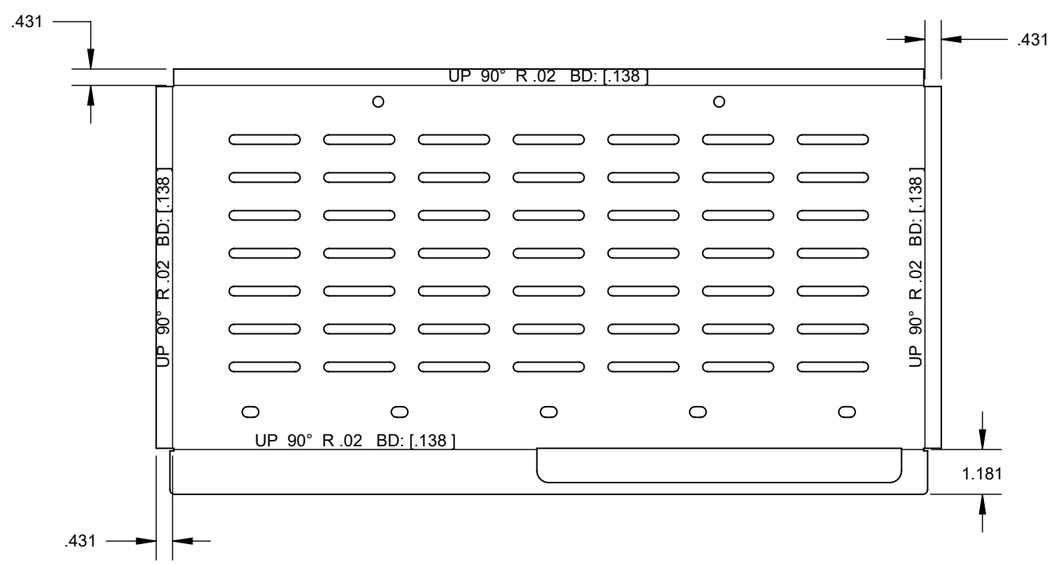

QTY: 2 PER

MATERIAL 4.49 lbs 0.0785 GALVANIZED CRS	DRAWN BY ML	SAVED ON 3/5/2019	Foxfab Power Solutions 2579-188 ST. SURREY, BC V3Z 2A1 (604) 460 - 9310 WWW.FOXFAB.COM
FINISH BARE	BD - / TOP DIE 0.024" / BOTTOM DIE 14mm		TITLE: PLATE, DEFLECTOR
PROPRIETARY AND CONFIDENTIAL THE INFORMATION CONTAINED IN THIS DRAWING IS THE SOLE PROPERTY OF FOXFAB POWER SOLUTIONS. ANY REPRODUCTION IN PART OR AS A WHOLE WITHOUT THE WRITTEN PERMISSION OF FOXFAB POWER SOLUTIONS IS PROHIBITED.	UNLESS OTHERWISE SPECIFIED: DIMENSIONS ARE IN INCHES TOLERANCES: X ± .25 X.X ± .1 X.XX ± .05 X.XXX ± .025 ANGULAR ± 1 INTERPRET DIM AND TOL. PER: **ASME Y14.5**	THIRD ANGLE: / SIZE **B** / SCALE 1:4 / REV B	
	ITEM NO. / DWG. NO. 250-20065 RevB		SHEET 1 OF 1

REVISION				
REV.	ZONE	DESCRIPTION	DATE	DRAWNBY
B	B4	was 0.60"	12/8/2017	h. wu

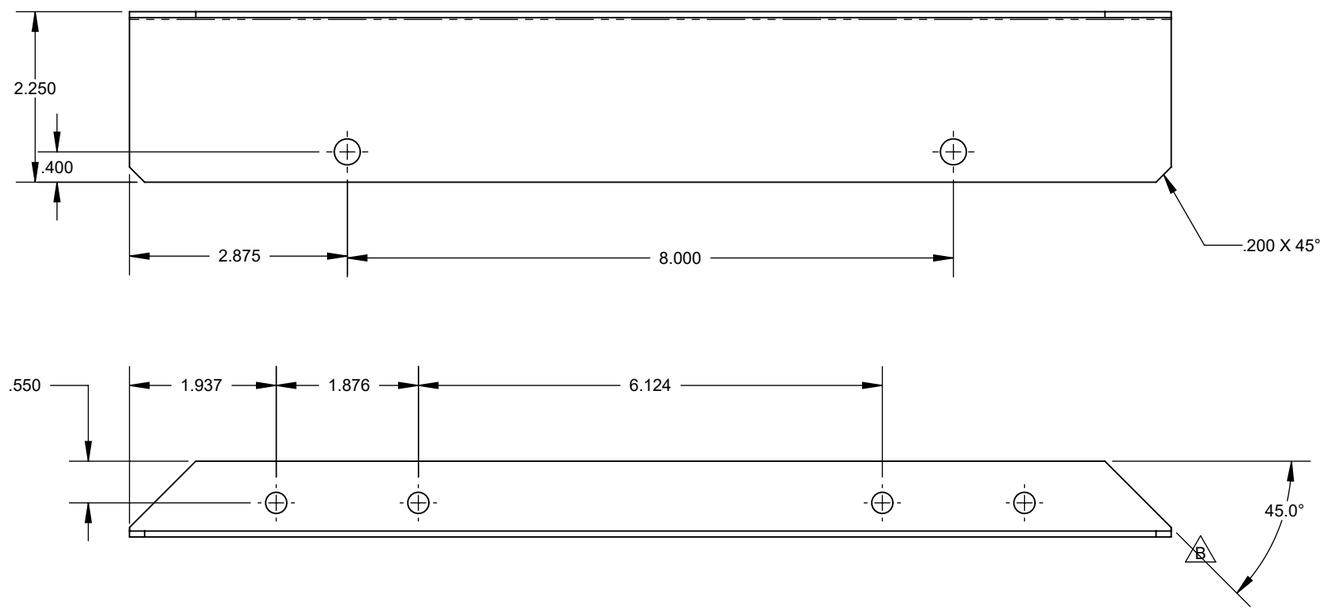

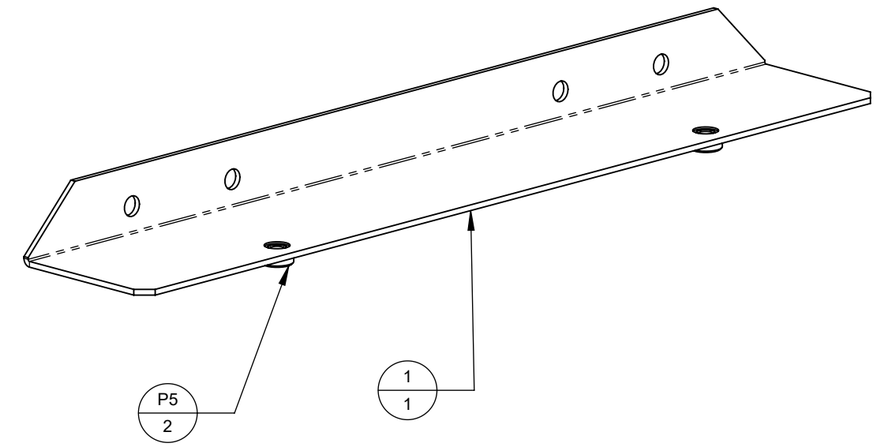

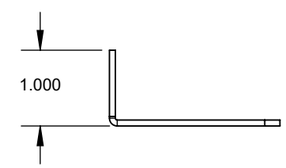

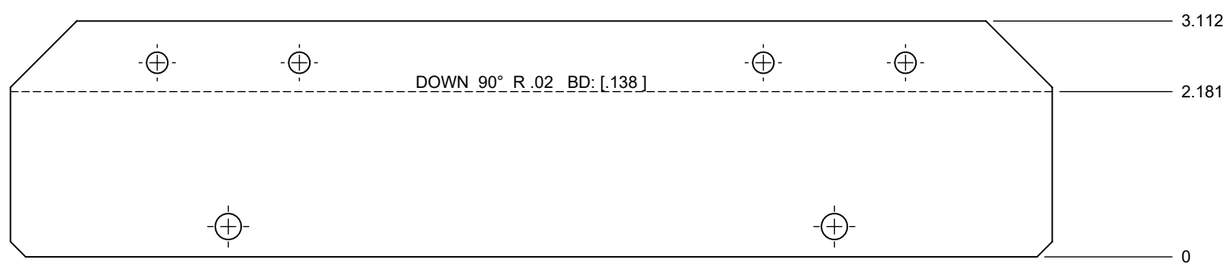

QUANTITY: 2 PER ENCLOSURE

BILL OF MATERIAL		
ITEM NO.	PART NUMBER	QTY.
1	250-30065	1
P5	PEM S-0420-1 ZI	2

MATERIAL 0.94 lbs
0.0785 GALVANIZED CRS

FINISH
BARE

PROPRIETARY AND CONFIDENTIAL

THE INFORMATION CONTAINED IN THIS DRAWING IS THE SOLE PROPERTY OF FOXFAB METAL WORKS ANY REPRODUCTION IN PART OR AS A WHOLE WITHOUT THE WRITTEN PERMISSION OF FOXFAB METAL WORKS IS PROHIBITED.

DRAWN BY: BB
CREATED ON: 11/8/2017
BD: -
TOP DIE: 0.024"
BOTTOM DIE: 14mm

UNLESS OTHERWISE SPECIFIED:
DIMENSIONS ARE IN INCHES
TOLERANCES:
X ± .25
X.X ± .1
X.XX ± .05
X.XXX ± .025
ANGULAR ±1
INTERPRET DIM AND TOL. PER: **ASME Y14.5**

FOXFAB POWER SOLUTIONS
2579 - 188 ST. SURREY, B.C. V3S 9V2
TEL: 604-460-9310 FAX: 604-460-9317
WWW.FOXFAB.COM

TITLE:
BRACKET, CAMPLATE

THIRD ANGLE: SIZE **B** SCALE 1:2 REV B

ITEM NO. DWG. NO. 250-30065 SHEET 1 OF 1

REVISION				
REV.	ZONE	DESCRIPTION	DATE	DRAWNBY
A		INITIAL RELEASE	5/26/2022	J. LEBLANC

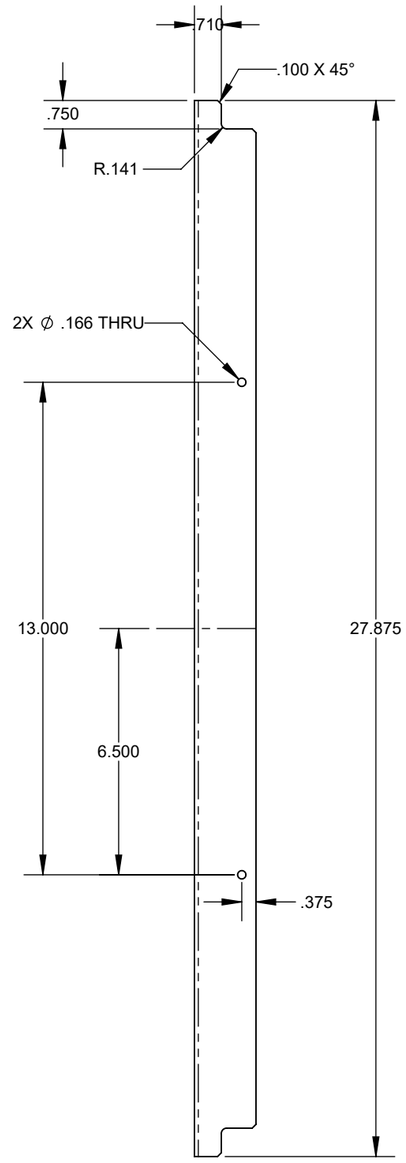

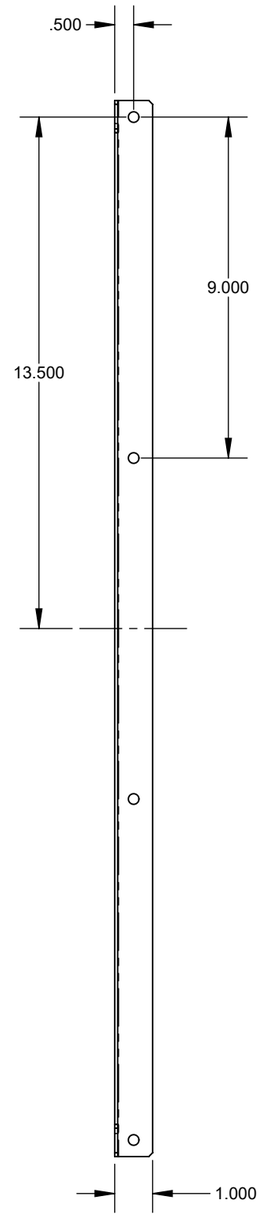

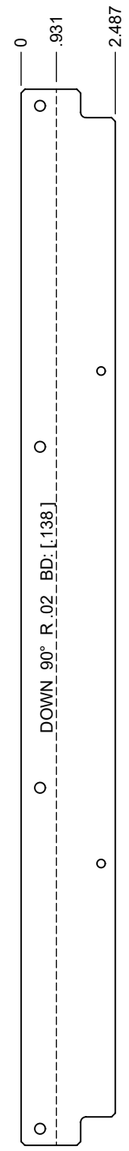

MATERIAL 1.53 lbs 0.0785 GALVANIZED CRS	DRAWN BY JL	SAVED ON 5/26/2022	Foxfab Power Solutions 2579-188 ST. SURREY, BC V3Z 2A1 (604) 460 - 9310 WWW.FOXFAB.COM
FINISH BARE	BD 0.138"	TOP DIE 1mm	BOTTOM DIE 14mm
PROPRIETARY AND CONFIDENTIAL THE INFORMATION CONTAINED IN THIS DRAWING IS THE SOLE PROPERTY OF FOXFAB POWER SOLUTIONS ANY REPRODUCTION IN PART OR AS A WHOLE WITHOUT THE WRITTEN PERMISSION OF FOXFAB POWER SOLUTIONS IS PROHIBITED.	UNLESS OTHERWISE SPECIFIED: DIMENSIONS ARE IN INCHES TOLERANCES: X ± .25 X.X ± .1 X.XX ± .05 X.XXX ± .025 ANGULAR ±1 INTERPRET DIM AND TOL. PER: **ASME Y14.5**	TITLE: BRACKET, DEADFRONT, HORIZONTAL	
	THIRD ANGLE:	SIZE **B**	SCALE 1:8 / REV A
	ITEM NO. / DWG. NO. 250-30089		SHEET 1 OF 1

REVISION				
REV.	ZONE	DESCRIPTION	DATE	DRAWNBY
A		INITIAL RELEASE	6/8/2022	J. LEBLANC

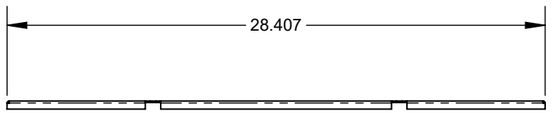

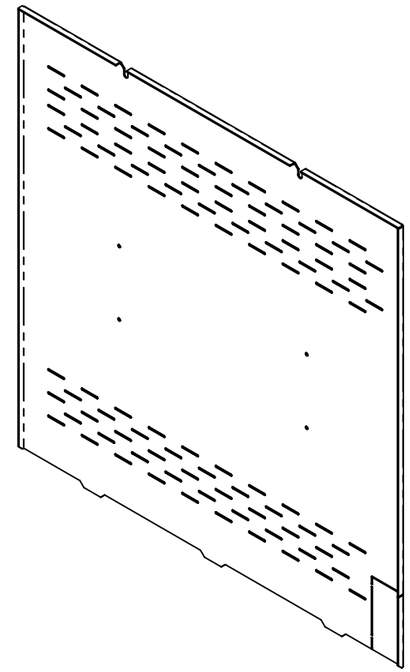

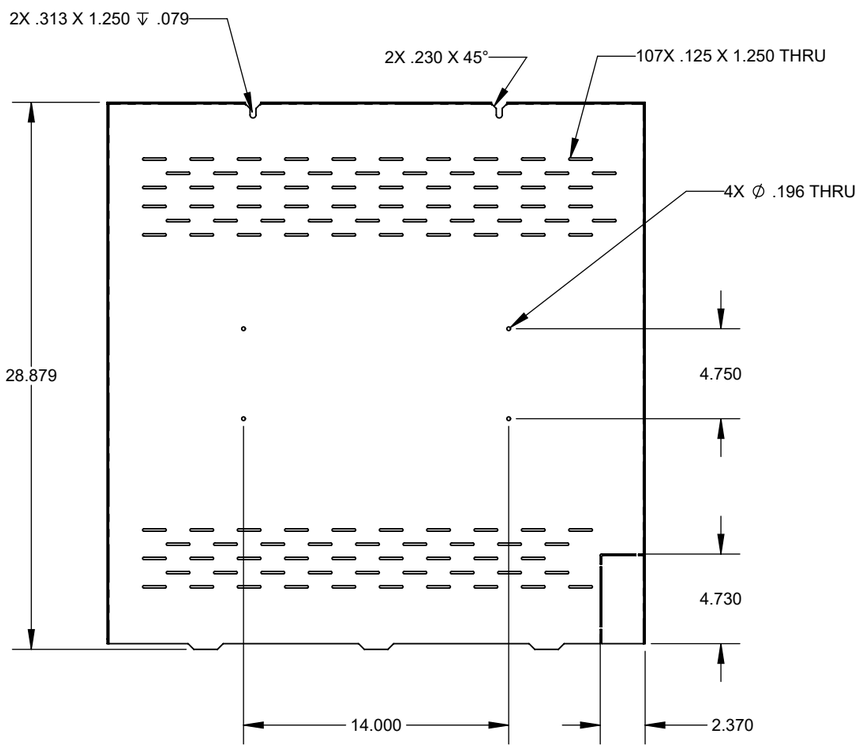

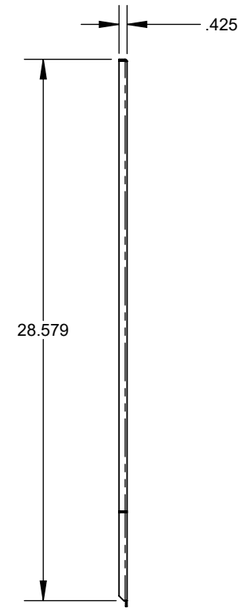

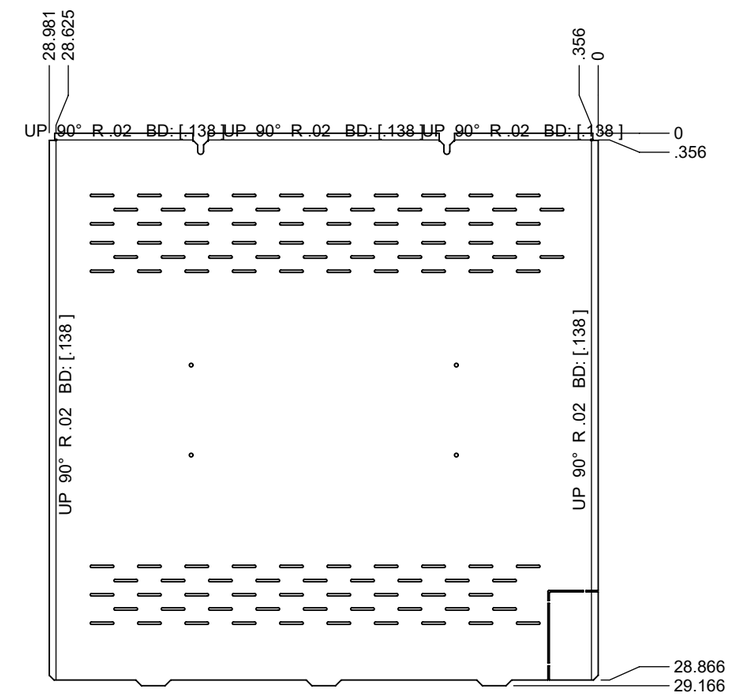

MATERIAL 18.29 lbs 0.0785 GALV, 14GA	DRAWN BY JL	SAVED ON 6/8/2022	Foxfab Power Solutions 2579-188 ST. SURREY, BC V3Z 2A1 (604) 460 - 9310 WWW.FOXFAB.COM
FINISH BAREBARE	BD 0.138" / TOP DIE 1mm / BOTTOM DIE 14mm		TITLE: DEADFRONT, 42x30 ENC, PILOT LIGHT OPTION
PROPRIETARY AND CONFIDENTIAL THE INFORMATION CONTAINED IN THIS DRAWING IS THE SOLE PROPERTY OF FOXFAB POWER SOLUTIONS ANY REPRODUCTION IN PART OR AS A WHOLE WITHOUT THE WRITTEN PERMISSION OF FOXFAB POWER SOLUTIONS IS PROHIBITED.	UNLESS OTHERWISE SPECIFIED: DIMENSIONS ARE IN INCHES TOLERANCES: X ± .25 X.X ± .1 X.XX ± .05 X.XXX ± .025 ANGULAR ±1 INTERPRET DIM AND TOL. PER: **ASME Y14.5**		THIRD ANGLE: / SIZE **B** / SCALE 1:8 / REV A
			ITEM NO. / DWG. NO. 250-40121 / SHEET 1 OF 1

REVISION				
REV.	ZONE	DESCRIPTION	DATE	DRAWNBY
A		INITIAL RELEASE	03/09/2023	L. BADONG

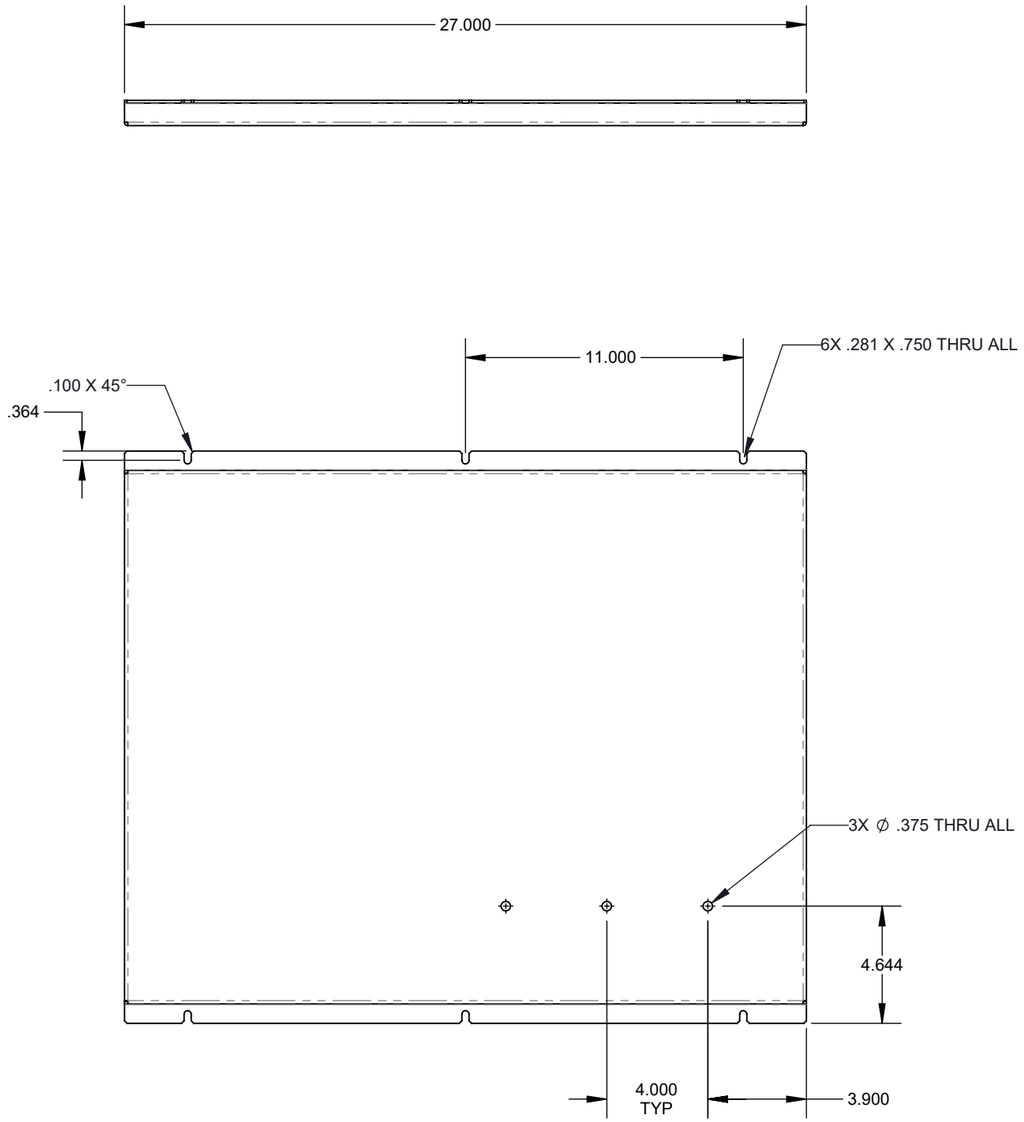

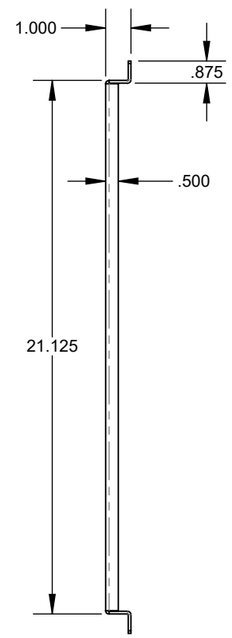

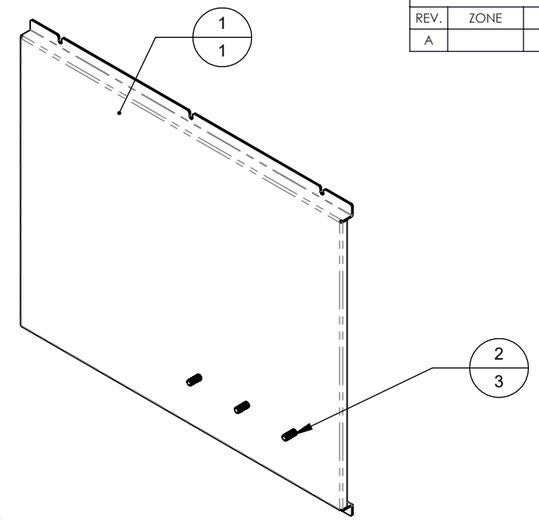

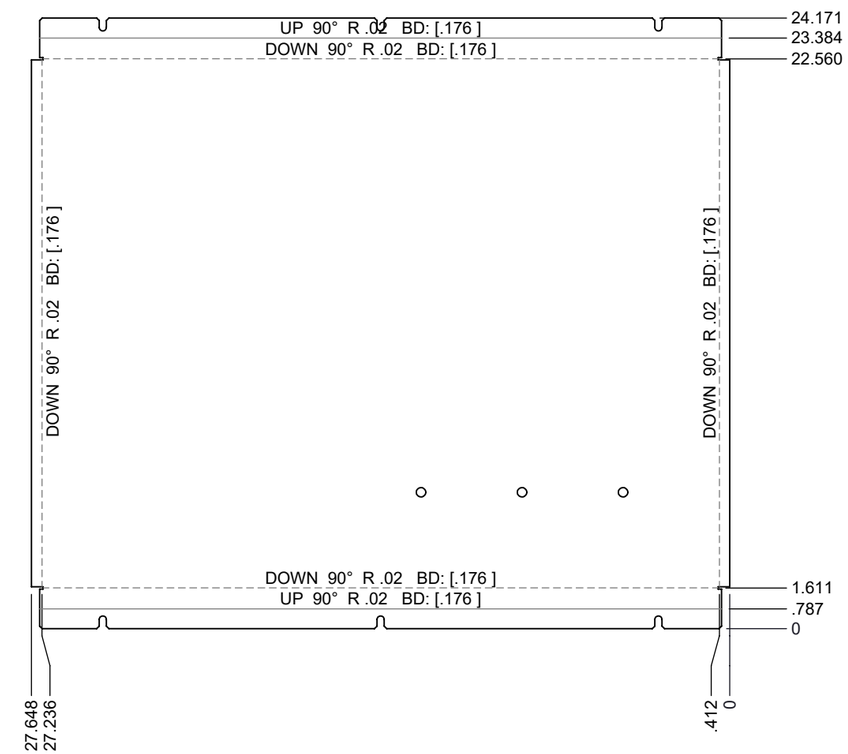

BILL OF MATERIAL

ITEM NO.	PART NUMBER	DESCRIPTION	QTY.
1	250-90002	BACKPAN, 400A C1 W/ FUSES, 42X30X16 ENCL	1
2	PEM HFH-0616-16 ZI		3

MATERIAL 20.57 lbs
0.108 GALVANIZED CRS

FINISH
BARE

PROPRIETARY AND CONFIDENTIAL

THE INFORMATION CONTAINED IN THIS DRAWING IS THE SOLE PROPERTY OF FOXFAB POWER SOLUTIONS ANY REPRODUCTION IN PART OR AS A WHOLE WITHOUT THE WRITTEN PERMISSION OF FOXFAB POWER SOLUTIONS IS PROHIBITED.

DRAWN BY LB
SAVED ON 7/18/2025
BD 0.176" | TOP DIE 1mm | BOTTOM DIE 16mm

UNLESS OTHERWISE SPECIFIED:
DIMENSIONS ARE IN INCHES
TOLERANCES:
X ± .25
X.X ± .1
X.XX ± .05
X.XXX ± .025
ANGULAR ± 1
INTERPRET DIM AND TOL. PER:
ASME Y14.5

Foxfab Power Solutions
2579-188 ST.
SURREY, BC V3Z 2A1
(604) 460 - 9310
WWW.FOXFAB.COM

TITLE:
BACKPAN, 400A C1 W/ FUSES, 42x30x16 ENCL

THIRD ANGLE: | SIZE **B** | SCALE 1:4 | REV A

ITEM NO. | DWG. NO. 250-90002 | SHEET 1 OF 1